TiTan™ 250T Ion Pump

TECHNICAL SPECIFICATIONS

Element Type	CV/CVX	DI/DIX	TR
Pumping Speed (l/s, Nitrogen)	250	200	200
Starting Pressure (mbar)	$\leq 1 \times 10^{-3}$	$\leq 1 \times 10^{-3}$	$\leq 5 \times 10^{-2}$
Lifetime (hours @ 10^{-6} mbar)	50,000	50,000	80,000
Ultimate Pressure (mbar)	$< 1 \times 10^{-11}$		
Maximum Baking Temperature (°C)	250 / 450 (without magnets)		
Inlet Flange	DN 150 (8 in.) CFF		
Weight, kg (lbs)	61 (142)		

DIMENSIONAL DETAILS*

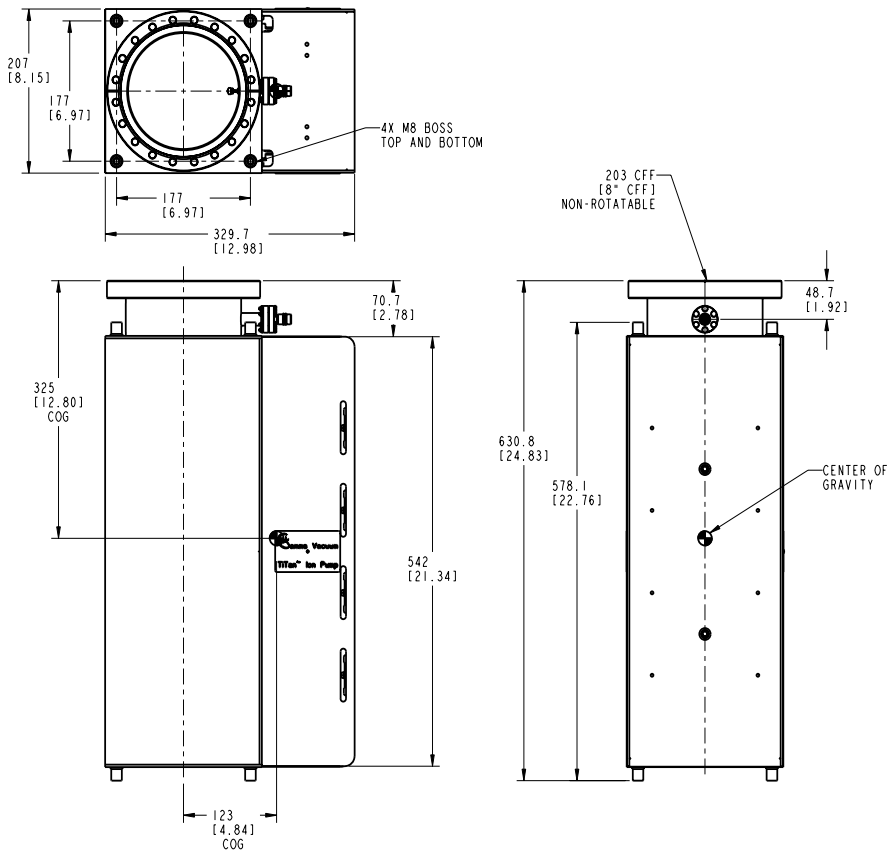

*Single inlet flange shown. Alternative configurations available at www.gammavacuum.com

STANDARD OPTIONS*

Element Styles		Ports		Feedthroughs		Heaters		TSP/NEG	
CV	Conventional 100% Titanium	8S	Single DN 150 (8 in. CFF)	SC	SAFECONN™ 10kV SHV	N	No Heaters	N	Not Installed
CVX	Conventional XHV Optimized	8D	Double DN 150 (8 in. CFF)	OP	Perkin Elmer	110	110-volt 90-130 nominal	TSPA	TSP with Ambient Shield
DI	DIfferential 50% Titanium 50% Tantalum	8P	Sideport DN 150 (8 in. CFF) DN 150 (8 in. CFF)	OV	Old Varian	220	220-volt 200-240 nominal	TSPC	TSP with Cryo Shroud
DIX	Differential XHV Optimized			VR	StarCell			NEG	N Series
TR	Triode Slotted Titanium			FI	Fisher				

*Configured part numbers and pricing are available at www.gammavacuum.com. Contact us directly for custom engineered options.

PERFORMANCE CHARACTERISTICS

Pumping Speed vs. Pressure

measured in accordance with ISO/DIS 3556-1.2-1192

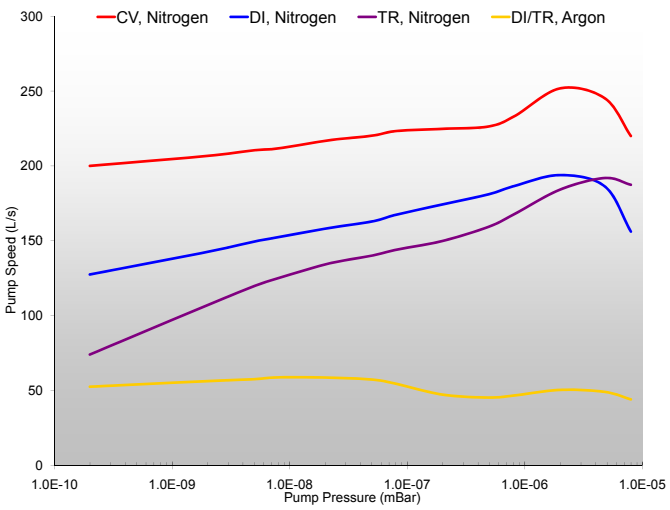

Current vs. Pressure

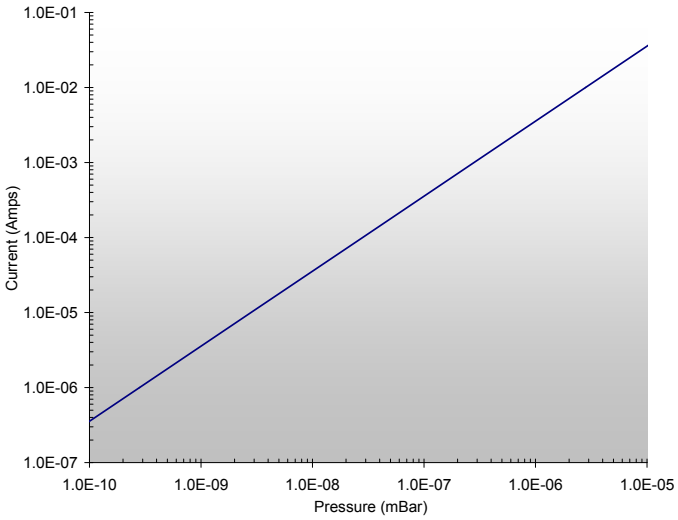

GAMMA VACUUM
2915 133rd Street West
Shakopee, MN 55379 | USA
800.237.3603 T | 952.445.4841 P
952.445.7615 F
gammavacuum.com | info@gammavacuum.com