edwardsvacuum.com

EDO 100 SCROLL VACUUM PUMP

EDWARDS

EDWARDS
THE PARTNER OF CHOICE

Edwards is a world leader in the design, technology and manufacture of vacuum pumps for industrial applications with over 100 years' history.

We believe in delivering results that bring value to our customers by using our breadth of industry experience to identify and apply solutions. Using the most innovative and up-to date modelling techniques, we can optimise the pumping configuration for customers to provide a system design giving the maximum performance in the most reliable and cost-effective way.

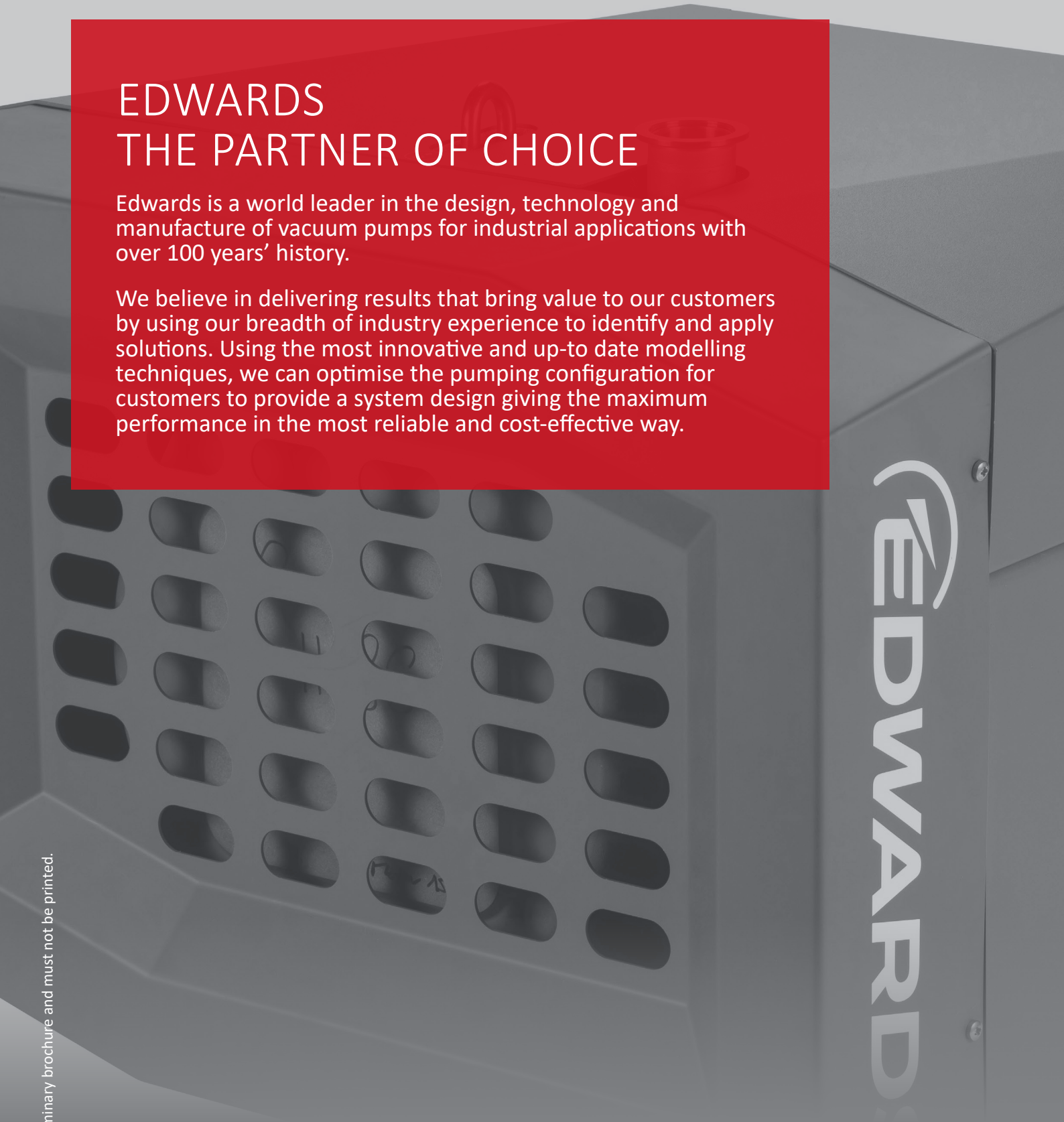

This is a preliminary brochure and must not be printed.

EDO100 PUMP FEATURES AND BENEFITS

Edwards Vacuum has led the technological advancement of dry vacuum pumps for more than 30 years. With close to 100,000 scroll pumps sold till date, our latest innovation in the dry vacuum pump technology is the new industrial scroll pump named EDO. With higher ultimate and improved roughing performance in the higher pressure region, this pump is suitable for all rough and medium vacuum applications.

Features and benefits

- Capable of continuous operating at all pressures
- Quite and comfortable to work around
- Compact
- Simple and easy to maintain
- Improved water vapour handling capability due to integrated gas ballast
- Inverter with on-board PID controller
- Improved roughing performance
- Presence of two blow off valves that reduce power consumption

RELIABLE & FLEXIBLE

Process Protection: Inlet non return valve to prevent back contamination. The pump also has an integrated inlet filter to protect the scroll mechanism against particle ingress.

Robust: Made with high quality precision engineered parts offering extended life time. Internals are made with anodised parts which offer protection against corrosion.

OPTMISED DESIGN

Compact: Our patented anti-rotation mechanism reduce stress at critical points supporting long running life time. This replaces the usual bellows, pins and cranks making the pump compact.

Higher pumping speed: The dual inlet stage allows for increased through put. In addition to this, the two blow off valves provides for additional pumping capacity.

INTELLIGENCE

Flexibility: Onboard PID controller to allow close loop feedback that be configured to perform speed control. This allows the pump to match process demand saving energy costs.

Peace of mind: Anti- clash sensors as well as temperature snap switch on the pump enables protection against the unexpected failure modes.

SIMPLICITY

Environmentally friendly: There is no need to worry about oil disposal, additional oil and mist filter as it's a dry pump. The internals are easy cleanable, so easy to service.

Comfortable to work around: The pump with integrated silencer and noise canceling canopy makes the pump quiet.

APPLICATIONS

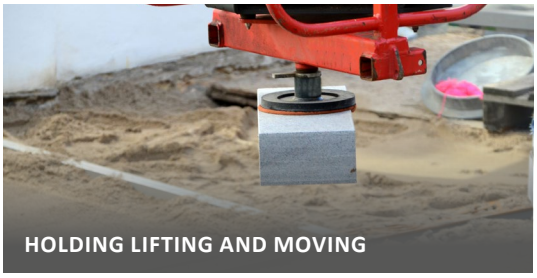

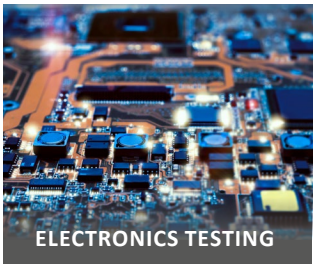

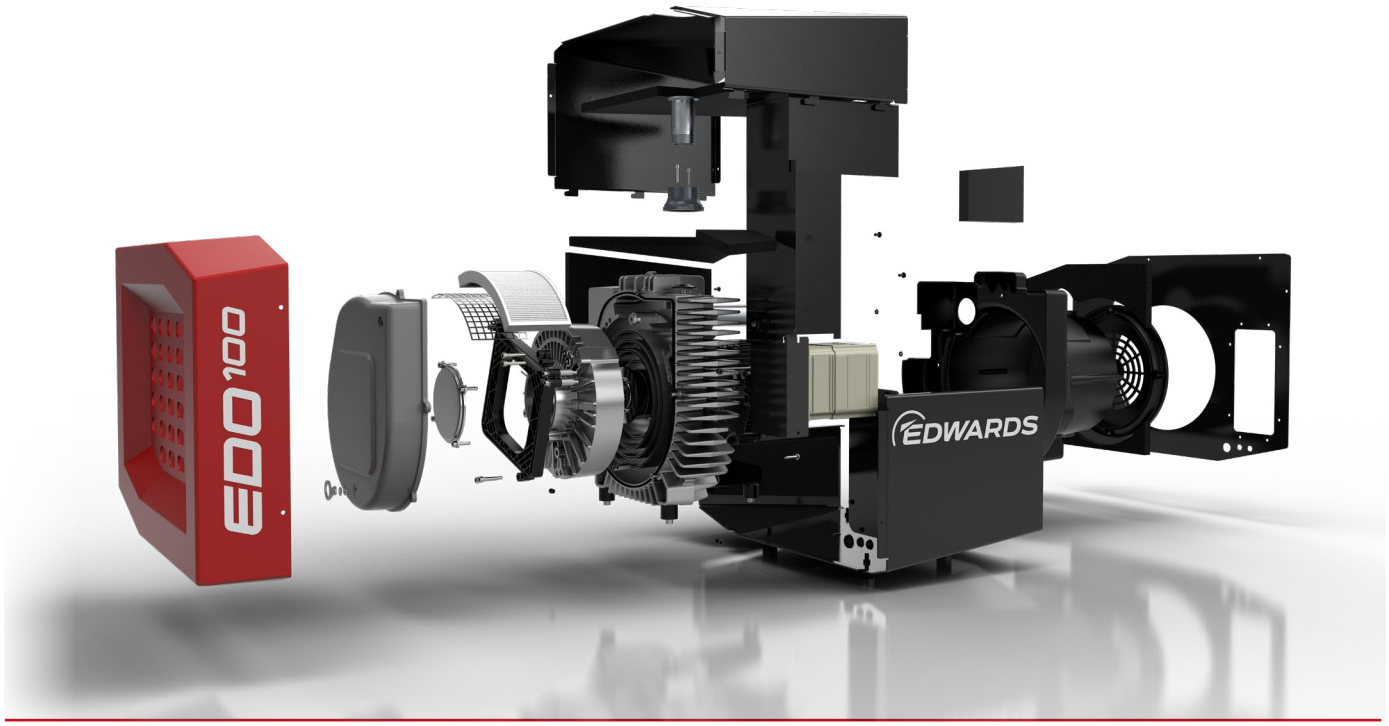

PERFORMANCE CURVES

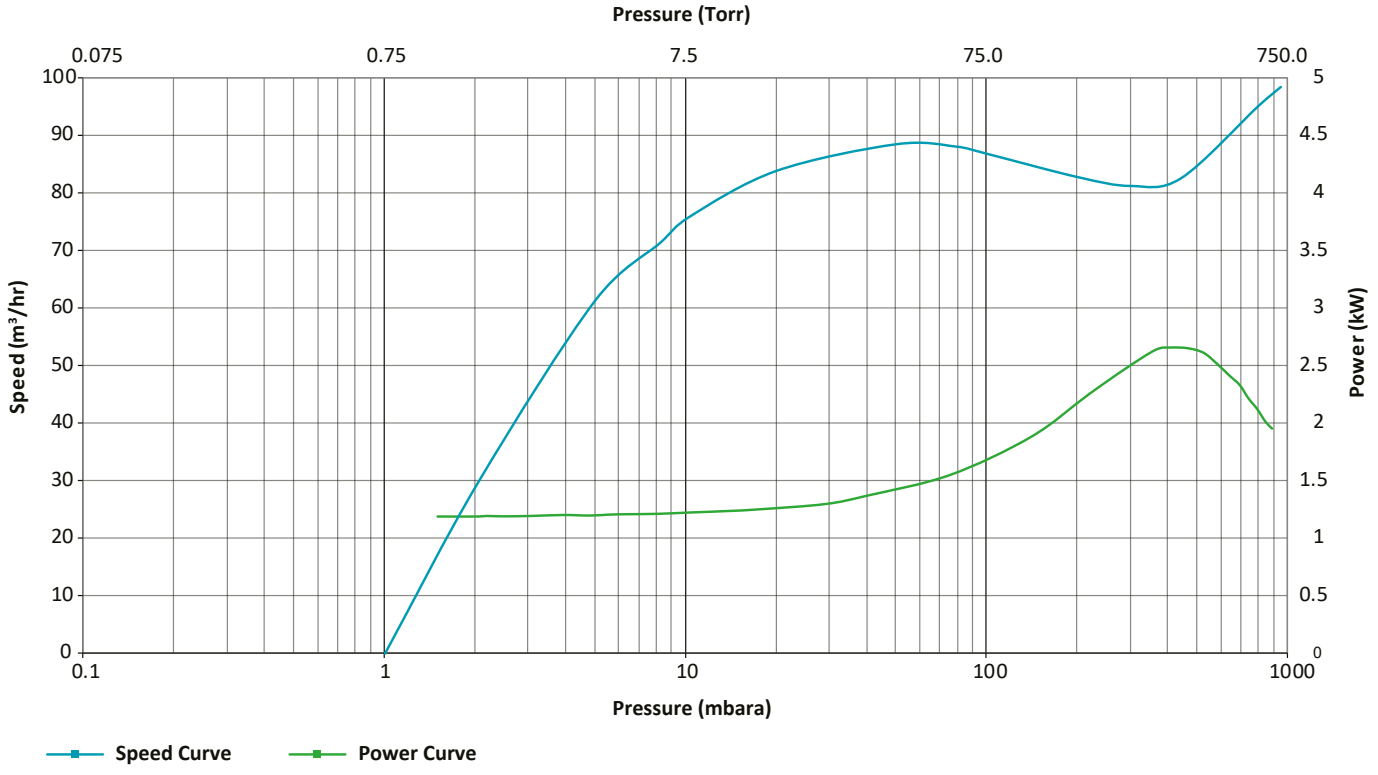

TECHNICAL DATA

Peak Pumping Speed	100 m^3/hr
Ultimate Vacuum	≥ 1mbar
Maximum Rotational Speed	3000 rpm
Power	2.2KW
Inlet/Outlet Flange	NW 40
Weight	~100 kg
Dimensions (mm)	H524 X L630 X W526
Ambient temperature range	0^0C - 46^0C
Maximum inlet temperature	70 Degree C
Maximum discharge temp	120 Degree C
Maximum Running time	Continuous duty (24/7)

DIMENSIONS

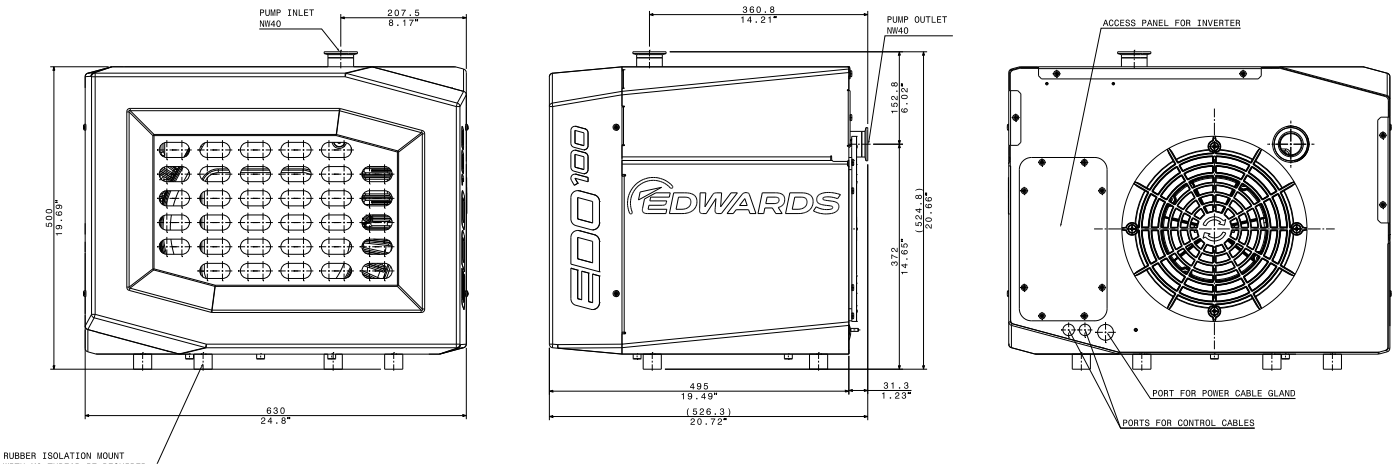

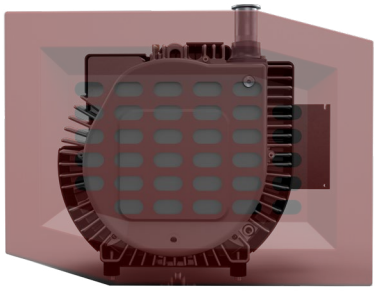

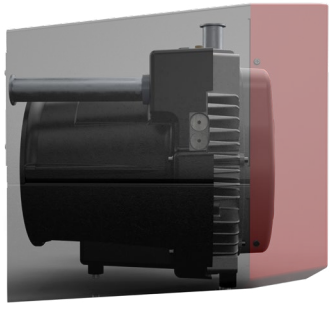

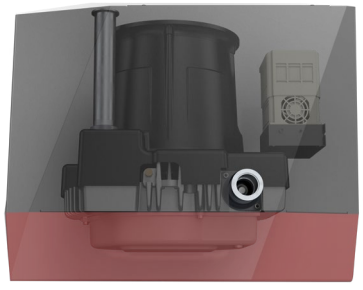

ORDERING INFORMATION

Description	Part Number
EDO 100 3 Phase supply 200-240V, 50/60Hz	A50871954
EDO 100 3 Phase supply 380-480V, 50/60Hz	A50871955

SERVICE AND SUPPORT

To ensure your EDO 100 system maintains optimal performance and reliability, we offer a wide range of service solutions, tailored to meet your needs. From Field Service intervention to Managed Maintenance agreements, we will take care of your pump to ensure that it continues to deliver clean, consistent, efficient performance, with lower running cost and optimum total cost of ownership for it entire operating life.

Selecting original spare parts, maintenance kits and oil, means that every critical part performs as it was intended. Form, fit and function are guaranteed. Our services engineers' only fit 100% genuine parts to ensure you receive the best result from each and every service.

- Service at your convenience. Our highly trained Service Technicians carry out commissioning, vacuum health check, routine maintenance, troubleshooting and repair for many types of vacuum equipment. We invest in the tools, training and inventory to enable service in a timely, safe and consistent manner, utilising our best known methods.
- Managed maintenance agreements. Regular scheduled maintenance can identify potential problems before they occur and plans can be structured around different levels of care. It enables cost management and will help you to avoid the risk and expense associated with unplanned downtime. Managed Maintenance let you focus on your business, we will take care of your maintenance.
- Service and remanufacturing in one of our Service Technology Centres. No matter the condition of your pump our vacuum specialists can handle it. We are experts in vacuum pump maintenance and support pumps from virtually every type of application.

edwardsvacuum.com

GLOBAL CONTACTS

EMEA	
UK	+44 1444 253 000 (local rate) 08459 212223
Belgium	+32 2 300 0730
France	+33 1 4121 1256
Germany	0800 000 1456
Italy	+ 39 02 48 4471
Israel	+ 972 8 681 0633

ASIA PACIFIC	
China	+86 400 111 9618
India	+91 20 4075 2222
Japan	+81 47 458 8836
Korea	+82 31 716 7070
Singapore	+65 6546 8408
Taiwan	+886 3758 1000

AMERICAS	
USA	+1 800 848 9800
Brazil	+55 11 3952 5000

© Edwards Limited 2019. All rights reserved
Edwards and the Edwards logo are trademarks of Edwards Limited.

Whilst we make every effort to ensure that we accurately describe our products and services, we give no guarantee as to the accuracy or completeness of any information provided in this brochure.

Edwards Ltd, registered in England and Wales No. 6124750, registered office: Innovation Drive, Burgess Hill, West Sussex, RH15 9TW, UK.

Part of the Atlas Copco Group